T-2583-BJN INSTALLATION INSTRUCTIONS

We will start these instructions with the assumption that you have rebuilt the rear end of your model T and are down to assembling the drive shaft to the rear end. You will start this assembly process with the drive shaft stripped of the original components. The original T-2596 drive shaft sleeve must be removed from the old drive shaft. The only old parts you will need from the tail end of your drive shaft is the pinion gear, pinion gear nut, and pinion gear key.

Step 1

Examine the end of your drive shaft where the T-2596 sleeve was removed. There can't be any burrs in the metal. If you have any burrs, remove them with a fine file. Also pay particular attention to the end of the keyway groove. That area can be distorted and cause problems sliding your new bearing assembly into place. If this area is distorted, dress it down with a fine file so it will not restrict the bearing assembly from sliding over it.

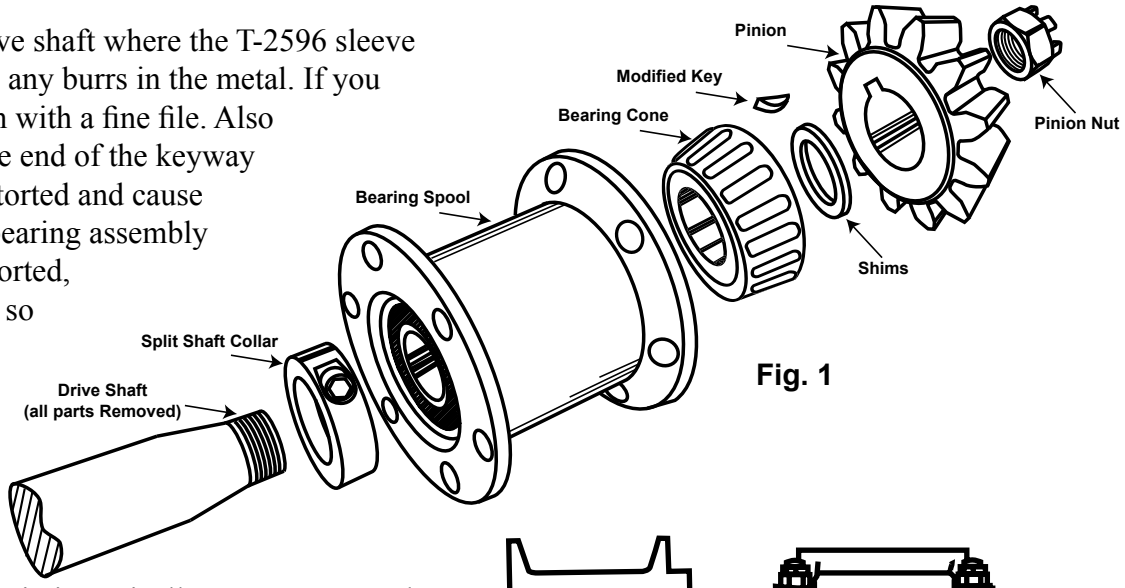

Fig. 1

Step 2

You will now need to stand your axle housing that has the ring gear in it vertically so you can set the clearance between the ring & pinion with your new drive shaft spool. Most parts suppliers sell an axle housing cradle (T-2502) that will bolt to your work bench and hold the axle housing in place. If you have a large vise, that will work as well. Once you have your axle housing in position, move to step 3.

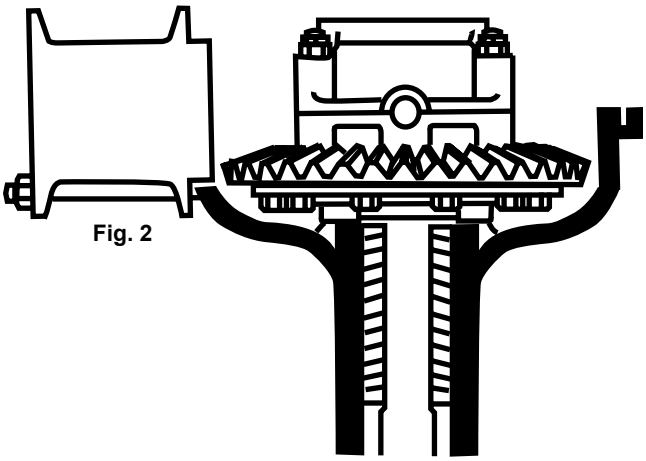
Fig. 2

Step 3

Bolt your spool to the axle housing using 3 of the spool bolts. You will have to use some flat washers under the head of the bolt to make up for the thickness of the torque tube. Make sure you insert the gasket between the spool and the axle housing if you will be using a gasket. If you will be using silicone sealant instead, leave the gasket out, Figure (2)

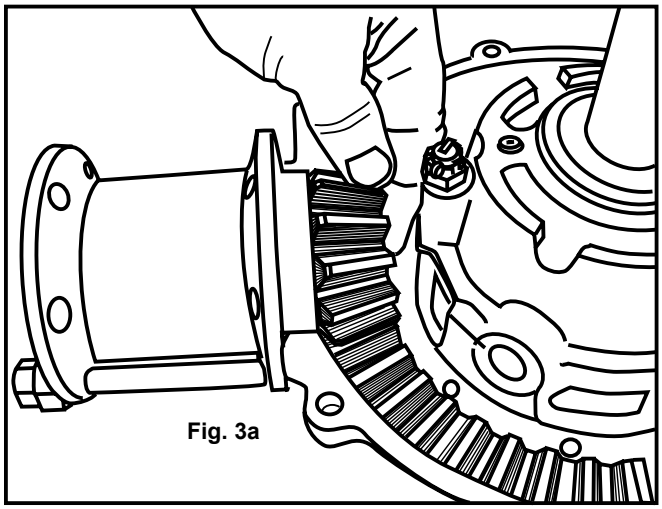
Fig. 3a

Step 4

You will now determine how many shims you need from the shim packet. For this step, you will need your pinion gear, the tapered roller bearing, and the thickest washer from the shim pack. Hold these three pieces in place per figure (3a, 3b) and observe the mesh of the ring & pinion gears. You will now add shims along side the thick washer until you have achieved the correct ring & pinion gear mesh. If your pinion gear is too far into the ring gear with only the thickest washer in place, remove it and replace it with the next thickest washer until you have achieved proper mesh. Once you have acquired the proper number of shims, set them aside for the final assembly.

Step 5
Disassemble the spool from the axle housing.

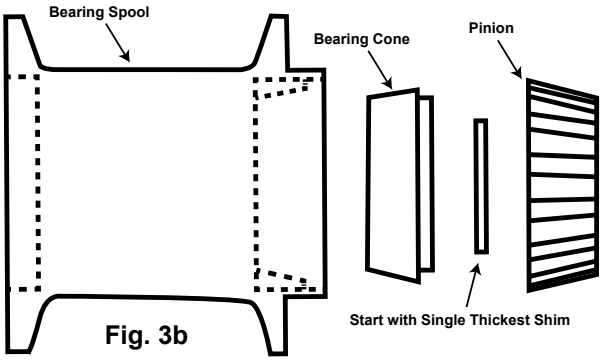

Fig. 3b

Step 6
Mount your drive shaft in a vise so you can work on the threaded end of the shaft. Now install the T-2598-B drive shaft key to the drive shaft. Now slide your shims in place and slide the pinion gear into position. You are now going to determine how much of the key will need to be filed away. When the gear and shims are in position, none of the key can be protruding past the shims. Hold the shims tight against the back of the pinion gear and mark the key with a marker so you know how much to file off. Slide the shims forward and file the key. Slide the shims back into position and verify that you have enough of the key removed. If all is well, remove the gear, shims, and key. Figure (4)

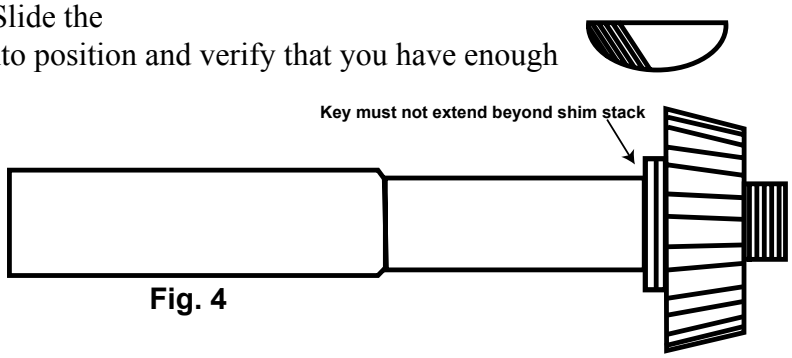

Fig. 4

Step 7
Slide the shaft collar with the allen headed set screw onto the end of the drive shaft as far as it will go. Do not tighten the set screw yet. See Figure (5)

Step 8
Slide the spool over the end of the drive shaft and against the collar. The end of the spool with the thrust bearing will be against the collar you just slid on. See figure (6)

Step 9
Dip the tapered roller bearing in rear end oil and install it onto the end of the drive shaft until the rear edge is 1-3/8” from the end and STOP. See figure (6)

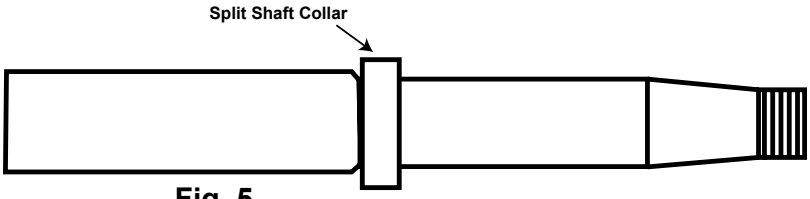

Fig. 5

Step 10
Insert the modified drive shaft key into the drive shaft with the modified end going forward just like it was earlier when you modified it. Now slide the shim pack over the end of the drive shaft and over the key starting with the thickest washer. Once all of the shims are in position, slide the pinion gear on and tighten the drive shaft nut to 70 foot pounds. The shims should now be tight between the pinion gear and the bearing. If you are sure the gear is properly seated, move to step 11. If you have any doubts, remove the nut be sure the gear is tightly seated on the taper. Reinstall the nut and re-torque to 70 1bs. Install the cotter key at this time. It may be necessary to tighten the nut more if you can not install the cotter key.

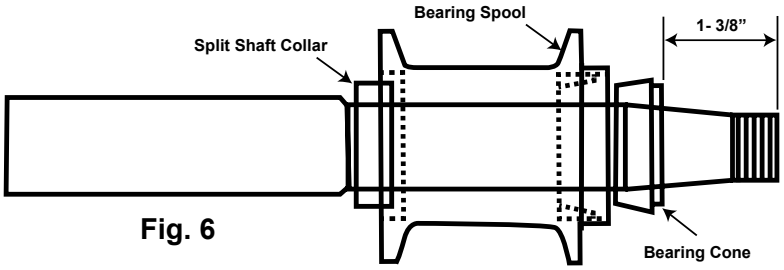

Fig. 6

Step 11
Slide the spool towards the rear of the drive shaft seating it on the tapered roller bearing. Now rotate the spool on the bearing to distribute any grease or oil.

Step 12
Slide the collar against the thrust bearing on the forward side of the spool and snug the set screw up just tight enough to hold the collar in place. You want the collar tight enough that it will stay in place but move if you tap on it.

Step 13
You are now going to adjust the preload on the tapered roller bearing just like you would a wheel bearing. Tap the collar towards the spool with a hammer and a block of wood. When you have the collar in the proper place, the spool should spin with a slight amount of drag. Once you have a slight amount of drag, tighten the set screw on the collar.

Step 14
Tap the back of the spool with a block of wood and a hammer as if you were trying to knock the spool forward. Now spin the spool and be sure you still have the same amount of drag as you did before. If the spool loosens, repeat step 13 as something wasn't quite tight enough.

Step 15
Test fit your torque tube over the new spool assembly. Sometimes it is necessary to take a burr grinder or a file to the ID of the torque tube to create enough clearance for the shaft collar. The shaft collar can not rub anywhere, any burrs or imperfections on the ID of the torque tube will need to be removed.

Step 16
If you installed a new T -2581 drive shaft bushing in the front end of the torque tube, you will need to spot face the head of the bushing so that your universal joint will go on far enough to be pinned in place. This is accomplished with facing tool T -2582. This is what originally controlled the backward movement of your pinion gear into the ring gear. If your old bushing was OK and not replaced you should not need to face the bushing.

Step 17
Assemble the spool and torque tube to the rear end. If you used a gasket between the spool and the rear axle housing in the earlier steps, be sure to use the gasket now. If you did not use a gasket earlier, you will be sealing the spool to the rear axle housing and torque tube using RTV sealant.

Step 18
Fill the rear end with lubricant and reinstall the rear axle assembly under your T! You're done!